DIRIS Digiware S

Current measurement module with built-in sensors

for 3 circuits

new

MID CERTIFIED

Configuration with Easy Config System.

DIRIS Digiware S

The solution for

- Data centre
- Healthcare

Strong points

- Plug & Play
- Multi-circuit
- Compact
- Accurate
- MID certified and more

RJ45 (Digiware Bus) cables are available.

Function

DIRIS Digiware S current acquisition modules have 3 integrated current sensors for the measurement of electrical circuits up to 63 A.

Positioned directly above or below the protective devices, they are associated with the DIRIS Digiware U voltage measurement module to measure consumption, and to monitor the electrical installation and the quality of the power supply.

Integrated technologies

PreciSense AutoCorrect VirtualMonitor

For more information see our website www.socomec.com

Advantages

Plug & Play

- Save wiring time: the current sensors are integrated in the module.
- Quick RJ45 connection between modules.
- Positioning possible upstream or downstream of the protective device.

Multi-circuit

Multiple DIRIS Digiware S modules can be used within the measurement system enabling the monitoring of a large number of loads.

Compact

- A measurement module offering the best compactness/performance ratio of the market.
- Matches the pitch of the protective device.

Accurate

DIRIS Digiware S modules offer class 0.5 accuracy (IEC 61557-12) and class C (EN 50470), allowing accurate measurements ove a wide current range.

MID certified and more

DIRIS Digiware S-130MID and S-135MID current modules comply with the MID Directive and guarantee accurate and reliable metering.

"Module B+D" certification means that an outside laboratory has certified the design of the meter and its production process.

They are also fitted with innovative functions that go beyond the standard offerings on the market:

- Innovative tamper-resistance systems: the MID modules have a smart alarm system that is more effective than the standard mechanical seals offered by MID meters.
- Integrated PreciSense Technology: MID modules have a class C energy accuracy measurement, which is the most accurate class under the MID directive. In addition, as with any DIRIS Digiware system, PreciSense technology offers the best accuracy on the market across the chain.

Conformity to standards

- IEC 61557-12
- UL 61010 Guide FTRZ/PICQ File E257746
- ANSI C12.20
- EN 50470-1
- EN 50470-3
- Directive 2014/32/EU

General characteristics

- 3 integrated current sensors
- Measurement up to 63 A
- Configurable as 3 single-phase circuits or 1 three-phase circuit

Also available

DIRIS Digiware BCM

In 18 or 21 circuits versions for the power distribution units (PDU) monitoring.

socomec Innovative Power Solutions

Functional diagram

Downstream

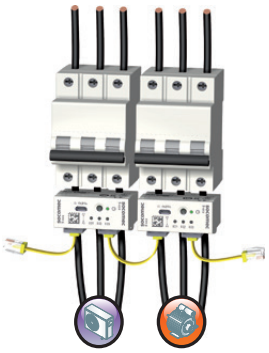

diris-dw_130.eps

Upstream

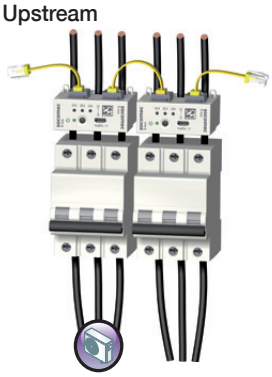

The DIRIS Digiware S measurement module can be mounted upstream or downstream of the protective device solving issues of space constraints.

Application	Current measurement module with integrated sensors			
	Metering		Analysis	
				
DIRIS Digiware S	***S-130***	***S-130MID***	***S-135***	***S-135MID***
Number of current inputs	3	3	3	3
Basic current I_b	10 A	10 A	10 A	10 A
Maximum current I_{max}	63 A	63 A	63 A	63 A
Load type accepted	1P + N 2P / 2P + N 3P / 3P + N	1P + N 2P / 2P + N 3P / 3P + N	1P + N 2P / 2P + N 3P / 3P + N	1P + N 2P / 2P + N 3P / 3P + N
Metering				
± kWh, ± kvarh, kVAh	•	•	•	•
Multi-tariff (max 8)			•	•
Load curves			•	•
MID		•		•
Multimesure				
I1, I2, I3, In, ΣP, ΣQ, ΣS, ΣPF	•	•	•	•
P, Q, S, PF per phase			•	•
Predictive power			•	•
Current unbalance (Inba, Inb, Idir, Iinv, Ihom)			•	•
Phi, cos Phi, tan Phi			•	•
Quality				
THDi1, THDi2, THDi3, THDin			•	•
Individual harmonics I (up to 63rd)			•	•
Crest factors U, V, I			•	•
K factor			•	•
Overcurrents			•	•
Alarms				
Thresholds and combinations			•	•
Wiring errors			•	•
Protective device	•	•	•	•
Trends				
Average values			•	•
Format				
Width	54 mm	54 mm	54 mm	54 mm

To be compliant with the MID directive, the DIRIS Digiware system must be equipped with a D-50/D-70 display.

DIRIS Digiware S

Current measurement module with built-in sensors
for 3 circuits

Mounting accessories

Temporary MCB insert
(for use during panel assembly)

<Sans lien d'intersection>

DIN rail and back plate mounting

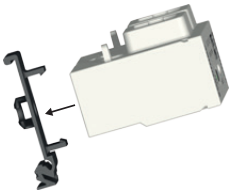

<Sans lien d'intersection>

Cable tie tether

diris-dw_139_b_x.ai

Dimensions (mm)

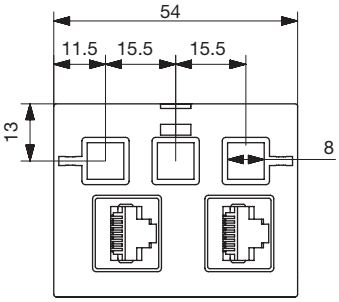

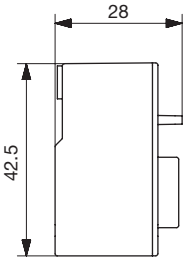

diris-dw_117_a_x_cat.eps

Connections

Current is measured by the integrated inputs I01, I02 and I03 on the DIRIS Digiware S module.

3P+N - 3CT

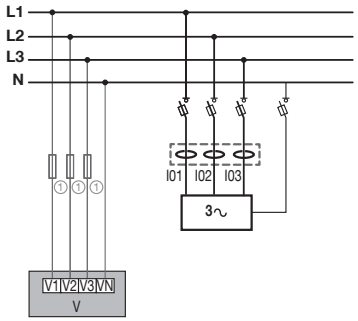

diris-dw_118_a_x_cat.ai

3P - 3 CT

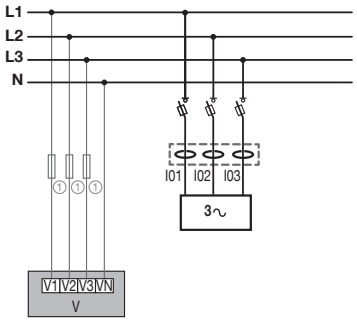

diris-dw_119_a_x_cat.ai

2P+N - 2CT & 2P+N - 1CT

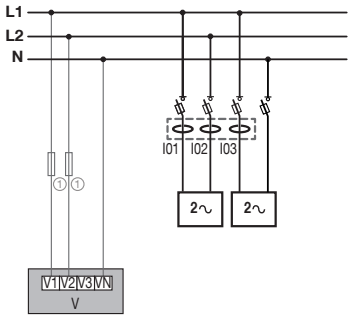

diris-dw_120_a_x_cat.ai

1P+N - 1 CT (3x)

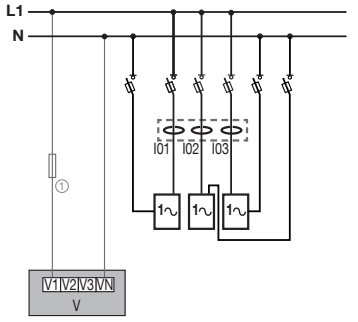

diris-dw_121_a_x_cat.ai

3P+N - 1CT (3x)

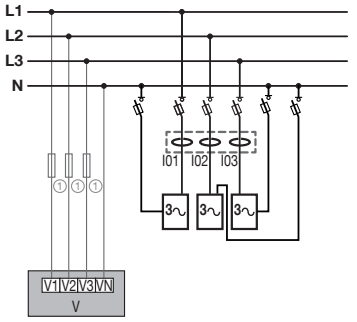

diris-dw_122_b_x_cat.ai

2P+N - 1CT (3x)

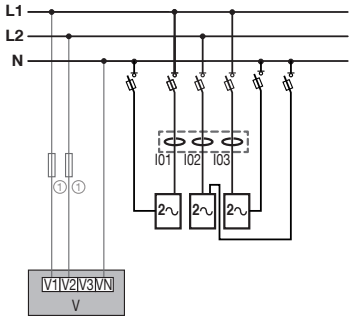

diris-dw_123_b_x_cat.ai

I01 I02 I03 DIRIS Digiware S 3∿ Load

Fuses : 0.5 A gG / BS 88 2 A gG / 0.5 A class CC

socomec Innovative Power Solutions

Technical characteristics

Measurement characteristics

Measurement of current	
Number of current inputs	3
Associated current sensors	Integrated in the product
Basic current Ib	10 A
Maximum current I_{max}	63 A
Current measurement accuracy	Class 0.5 IEC 61557-12
Measurement of energy	
Accuracy of active energy	Class 0.5 (IEC 61557-12) / Class C (EN 50470)
Accuracy of reactive energy	Class 1 IEC 61557-12

Mechanical characteristics

Casing type	DIN rail or back plate mounting
Casing protection index	IP20/IK08
Weight	63 g
Module power consumption	0.35 VA

Communication specifications

BUS Digiware	
Function	Connection between DIRIS Digiware S, U, I modules and system interfaces
Cable type	Specific Socomec cable with RJ45 connections
USB	
Protocol	MODBUS RTU on USB
Function	Configuration of DIRIS Digiware modules
Location	On each DIRIS Digiware module
Connection	Type B micro USB connector

Caractéristiques environnementales

Ambient operating temperature	-10 … +55 °C
Storage temperature	-25 … +70 °C
Operating humidity	40 °C/95 % HR
Operating altitude	< 2000 m

Références

DIRIS Digiware S		Référence
S-130	Metering - 3 integrated current inputs	4829 **0160**
S-130MID	Metering - 3 integrated current inputs + MID	4829 **0163**
S-135	Analysis - 3 integrated current inputs	4829 **0161**
S-135MID	Analysis - 3 integrated current inputs + MID	4829 **0164**
Accessories		**Référence**
DIN rail and back plate mounting clip (x10)		4829 **0195**
Temporary MCB insert (x10)		4829 **0196**

To be compliant with the MID directive, the DIRIS Digiware system must be equipped with a D-50/D-70 display.

Digiware connection cables		Référence
RJ45 cables for Digiware Bus	Length 0.06 m(1)	4829 **0189**
	Length 0.10 m	4829 **0181**
	Length 0.20 m	4829 **0188**
	Length 0.50 m	4829 **0182**
	Length 1 m	4829 **0183**
	Length 2 m	4829 **0184**
	Length 3 m	4829 **0190**
	Length 5 m	4829 **0186**
	Length 10 m	4829 **0187**
	50 m reel + 100 connectors	4829 **0185**
Termination for Digiware Bus (supplied with interfaces C and D)		4829 **0180**
USB configuration cable		4829 **0050**

(1) The RJ45 6 cm cables can be used on 3-pole or 4-pole protective devices.

Expert services

EXPERT SERVICES

To continuously guarantee a functional and accurate energy monitoring system, Socomec offers a wide range of services:
- Incorporation of devices.
- System audit.
- Commissioning.
- Training for your teams.

Also, Ideal for ISO 50001 sites (periodic verification):
- Measurement consistency check to 3%.
- Measurement accuracy check to 0.2%.

For more information, please call your Socomec contact